OZAH Series Slurry Pump

Product Design, Construction and Material Guide

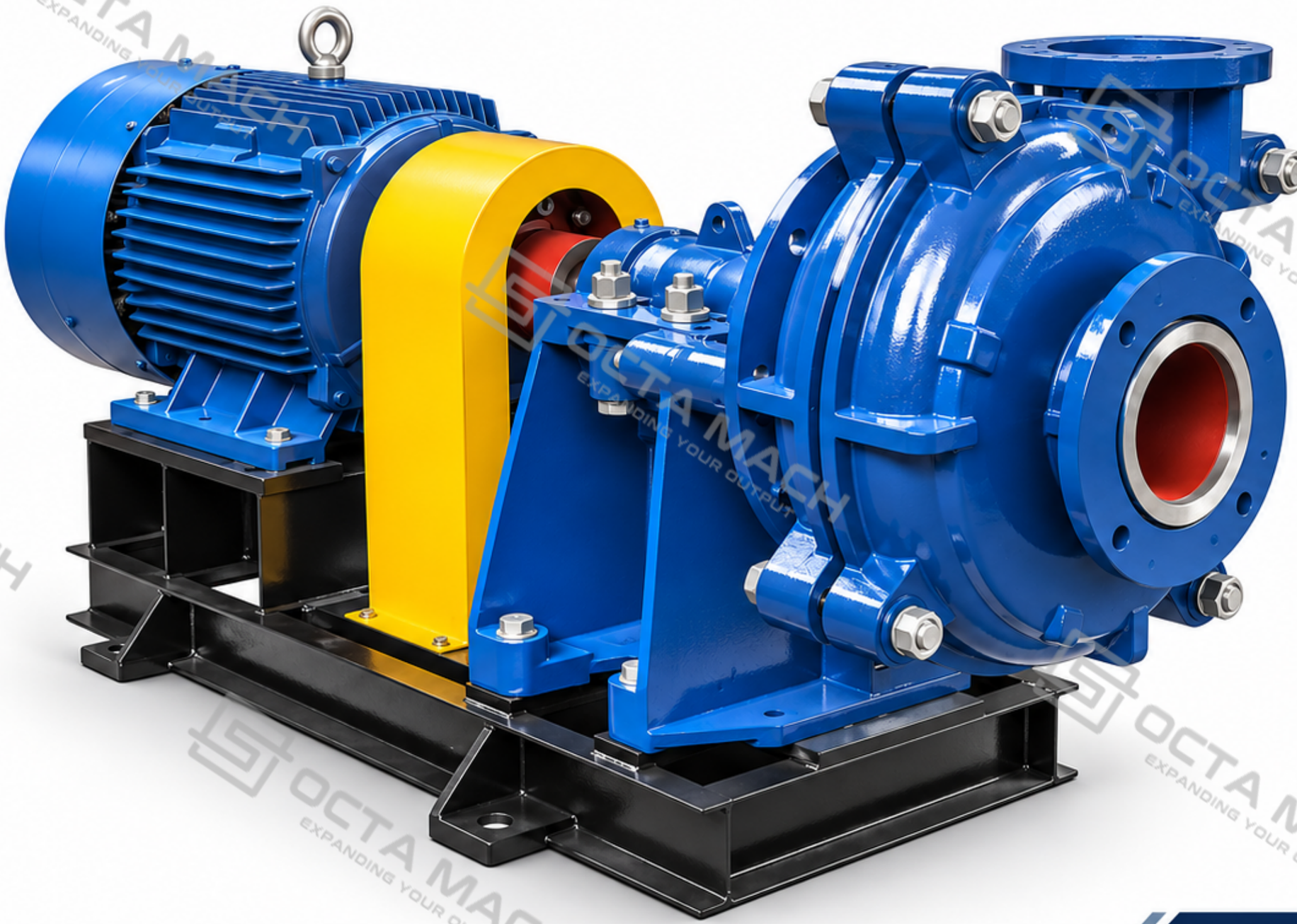

- **Double Casing Construction**
- **Replaceable Wear Components**
- **Heavy-Duty Impeller**
- **Multiple Material Options**

OCTA MACH EXPANDING YOUR OUTPUT

OZAH® | Mineral Processing Engineering Flow Diagram

Crushing – Grinding – Slurry Formation – Pumping – Classification – Flotation

Dry Ore Handling (Crushing)



Run-of-Mine Ore



Jaw Crusher

OR



Cone Crusher



Crushed Ore

Wet Mineral Processing (Grinding – Classification – Flotation)

Hydrocyclone Underflow (Return to Grinding)

Hydrocyclone Overflow (to Flotation)



Grinding Mill (Ball Mill)



Hydrocyclone (Classification)



Flotation Equipment (Flotation Circuit)



Slurry Sump (Slurry Formation)



OZAH® Centrifugal Slurry Pump (Heavy-Duty Sturry Pump)



Concentrate Handling (Concentrate to Subsequent Treatment)



Tailings Transportation (Tailings to Storage Facility)

Legend

Material Flow (Ore / Slurry)

Dry Ore Handling (Dry, Non-Slurry)

Wet Mineral Processing (Slurry Circulation)

Simplified Mineral Processing Flow. Actual plant configurations may vary.

Working Principle of the OZAH Slurry Pump

The OZAH Series operates through centrifugal force generated by its rotating impeller, which accelerates the incoming slurry from the center toward the outer edge and converts velocity energy into pressure energy to achieve continuous transportation.

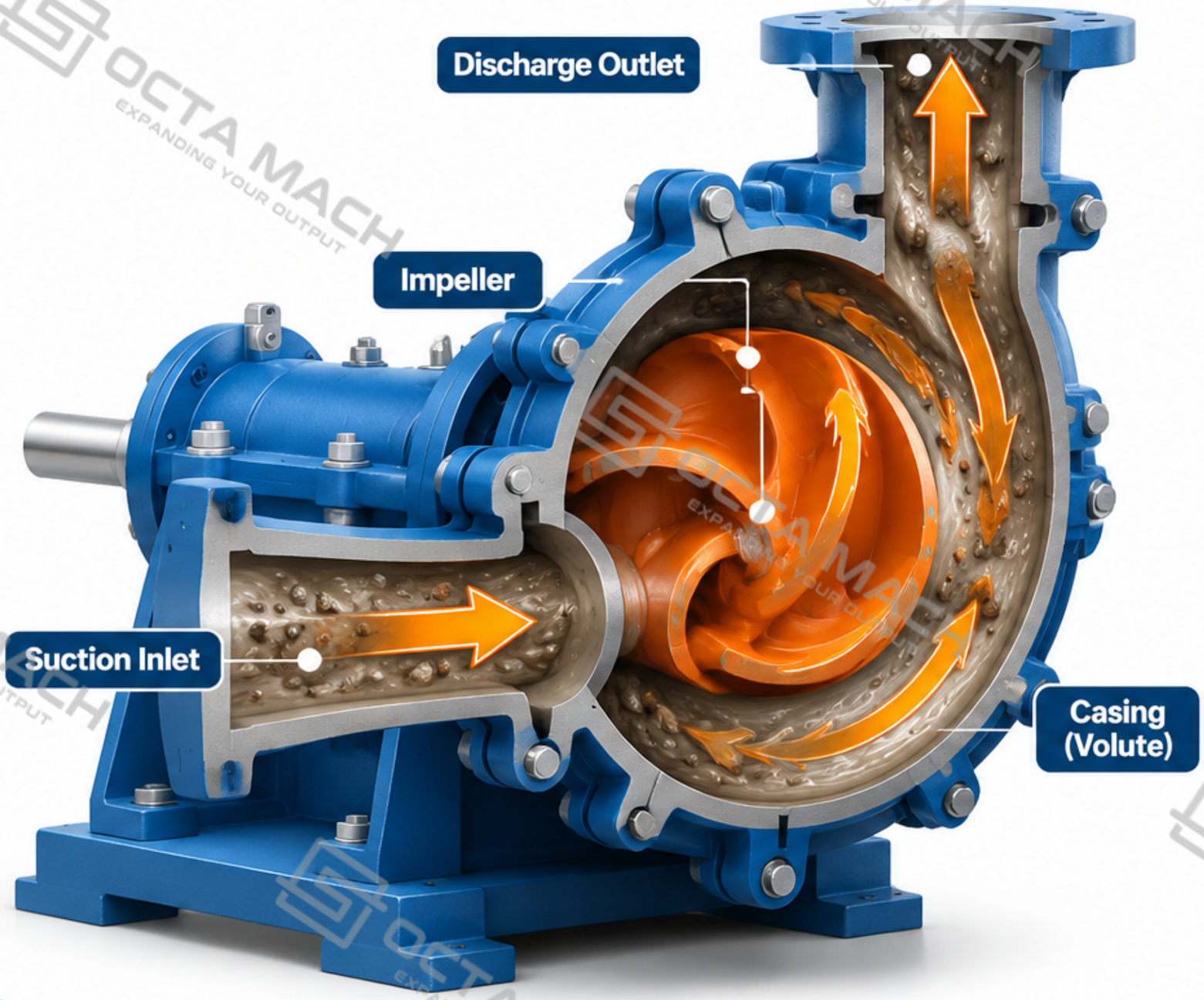

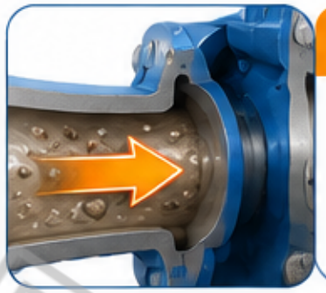

01 Slurry Inlet

The solid–liquid mixture enters through the suction inlet and flows toward the center of the impeller.



02 Impeller Energy Transfer

The rotating impeller vanes transfer mechanical energy to the slurry, increasing its velocity and directing it outward.

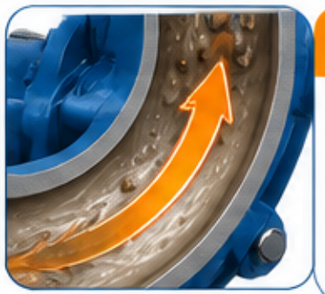

03 Pressure Conversion

As the slurry enters the casing, the flow passage guides the mixture and converts part of its velocity energy into pressure energy.



04 Discharge

The pressurized slurry leaves through the discharge connection and enters the downstream pipeline for further processing.

Double-Casing Construction and Replaceable Wear Parts



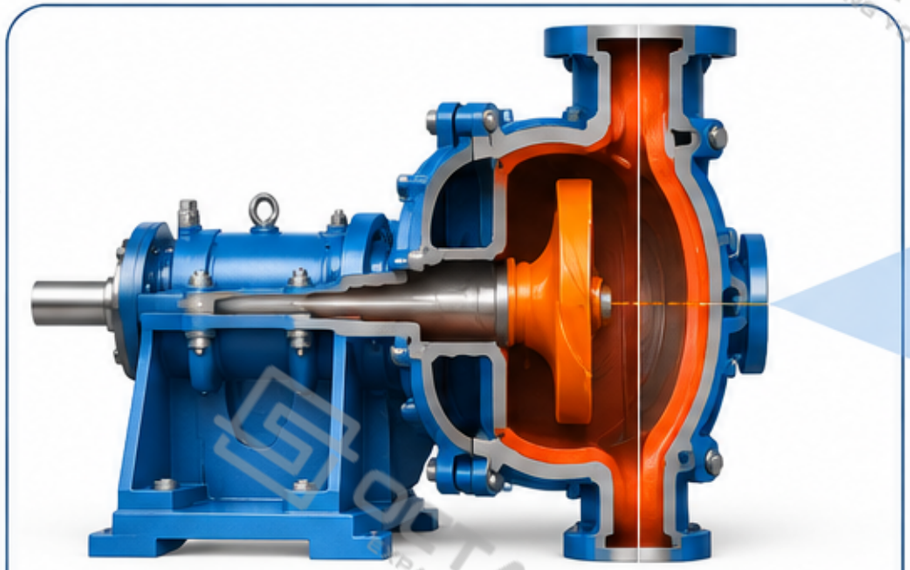

Vertical Split Double-Casing Construction



Through-Bolt Connection

Key Design Features

- Double-casing construction with a vertical split design.
- Replaceable wet-end components (impeller, casing liners and wear plates).
- Through-bolt connection for reliable assembly and easy maintenance.

Key Design Features of the OZAH Slurry Pump

01 Large-Diameter, Low-Speed Impeller



- Large-diameter impeller for stable slurry transportation at lower rotational speed.
- Front and rear shrouds with back vanes to reduce internal leakage.

02 Large Open Internal Flow Passages

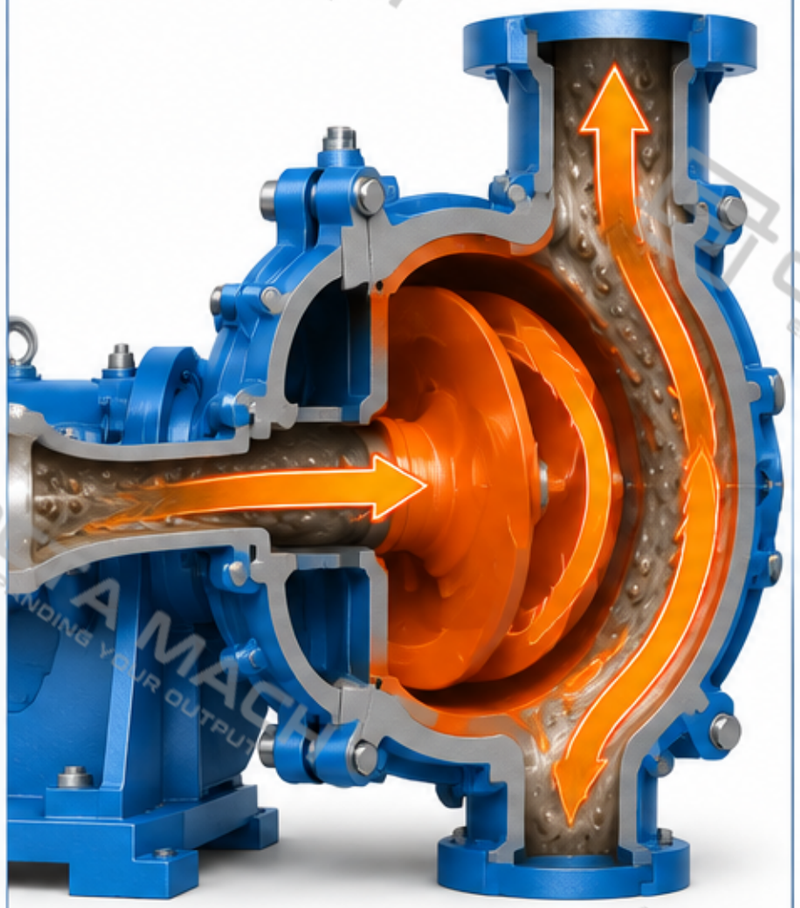

- Large and open flow passages to reduce slurry velocity inside the pump.
- Help to minimize abrasive wear and improve service life under high-solids conditions.

03 Short Shaft Overhang and Cartridge Bearing Assembly

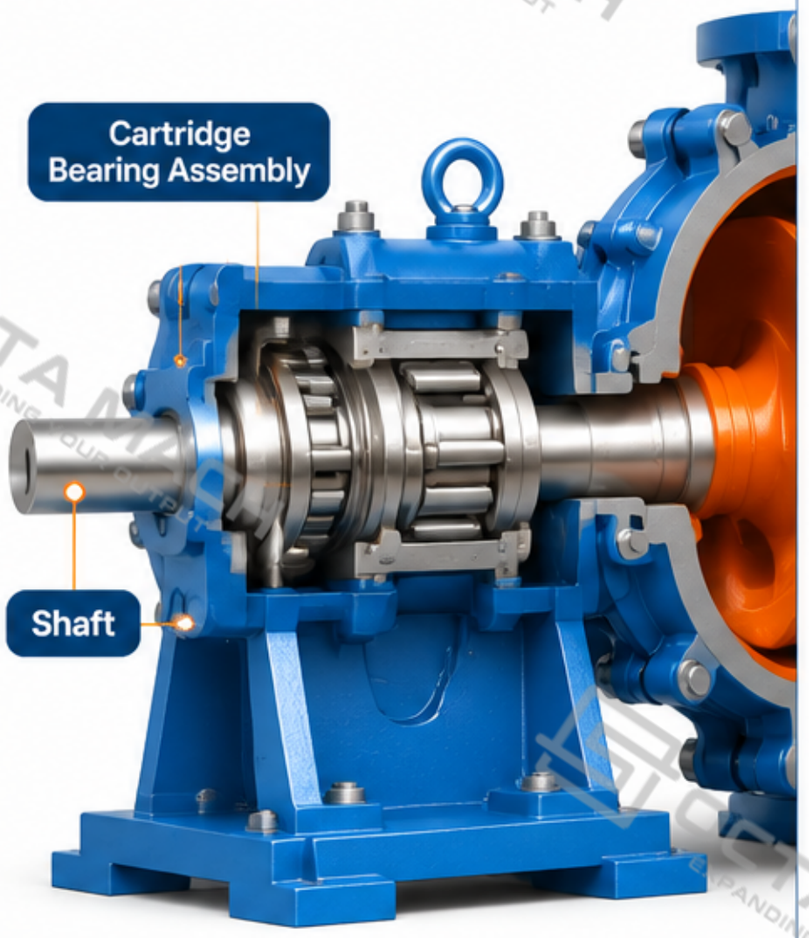

- Short shaft overhang design to reduce shaft deflection and vibration.
- Cartridge bearing assembly for convenient maintenance without dismantling the pump.
- Bearing housing supports reliable operation under heavy-duty slurry service.

OZAH Slurry Pump Wear Materials and Applications

A05 High Chrome Alloy



- HRC 58–62 hardness after heat treatment.
- Good abrasion resistance for high-wear slurry conditions.
- Suitable for neutral or mildly alkaline slurry with low corrosivity.

A49 FGD Alloy



- High abrasion resistance.
- Improved acid resistance compared with standard high chrome alloys.
- Designed for FGD (flue gas desulfurization) slurry service, with pH ≥ 3.5.

R55 Natural Rubber



- Good elasticity for impact and vibration conditions.
- Strong cutting resistance and tearing resistance.
- Suitable for fine slurry, especially media containing fine sand.

Material	Key Characteristics	Typical Application
A05 High Chrome Alloy	■ HRC 58–62 after heat treatment ■ Good abrasion resistance	Neutral or mildly alkaline slurry with low corrosivity
A49 FGD Alloy	■ High abrasion resistance ■ Improved acid resistance	FGD slurry (flue gas desulfurization) with pH ≥ 3.5
R55 Natural Rubber	■ Good elasticity ■ Cutting resistance ■ Tearing resistance	Fine slurry, especially media containing fine sand

Selection Notes

- The above materials are designed for different slurry characteristics and operating conditions.
- Material selection should be based on the slurry abrasiveness, corrosivity (pH), particle size and overall process conditions.

OZAH® OZAH Slurry Pump Sealing and Drive Systems

1. SHAFT SEALING

Single-end-face balanced cartridge mechanical seal

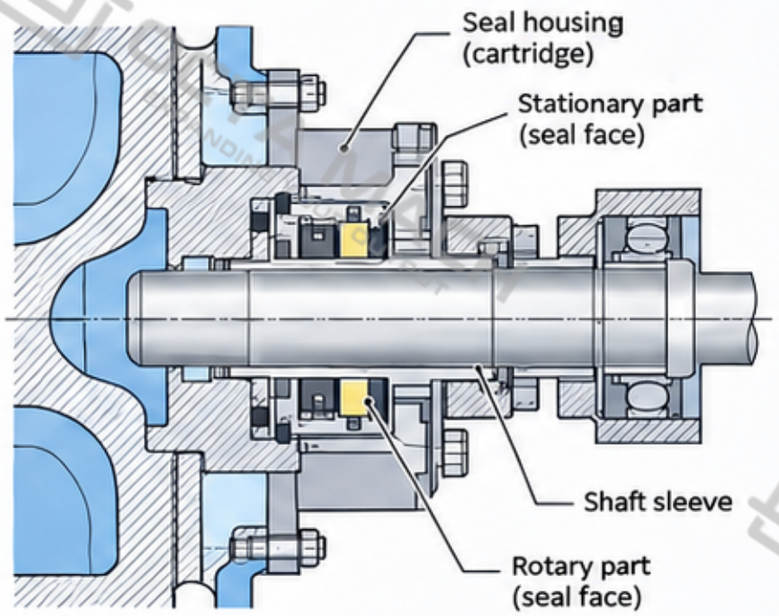

Double cartridge mechanical seal

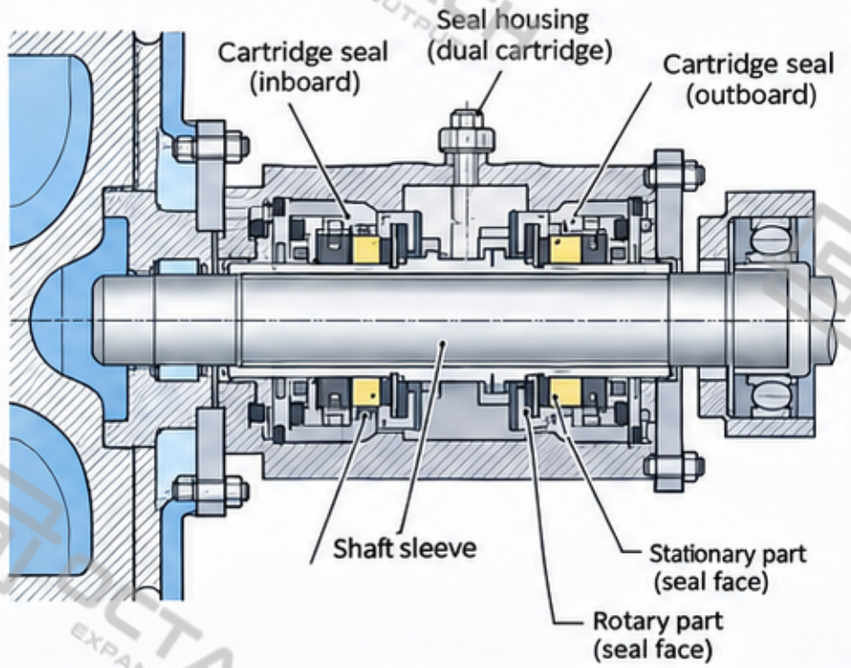

Packing seal (alternative arrangement)

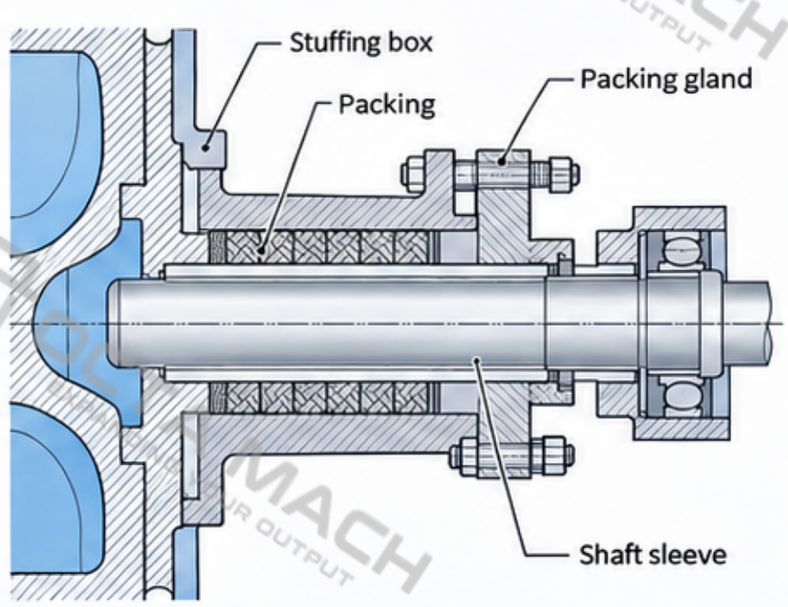

Application (sealing system)	pH	1–14
	Chloride ions	≤ 60,000 ppm

Caution: These values are sealing-system application specifications and are not universal ratings for every pump wetted material.

2. DRIVE ARRANGEMENTS

CRZ

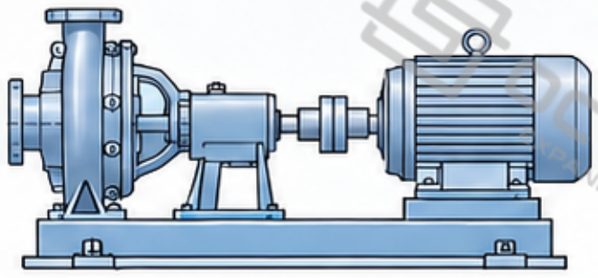

CV

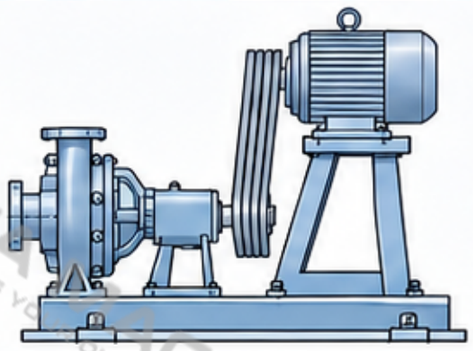

DCZ

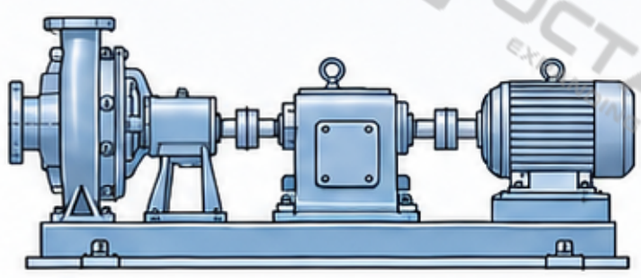

ZVZ

